ZERO CIVIL

TECHNOLOGY THAT TRANSFORMS

IMPACT RESISTANT

Made from impact absorbing advanced polymer compound, that provides a safe, soft surface and self recovers from light impact

UV RESISTANT

Made with unique blend of Supa UV our Advanced Polymer Bollards offer 4.5 times the UV protection required by Australian Standard (AS/NZ 4766:2006) with design life up to 50 years

FOOTINGS CAN BE MADE REUSABLE

When secured on Impact Recovery System the concrete footings can be protected from damage for the entire lifespan of a development!

BOLLARDS CAN BE MADE REUSABLE

When secured on Impact Recovery System bollards self-recover from low-speed impact and are removable and reusable following severe impact

SPECIFICATIONS APB 2026

Photo Dept Transport Safety Yellow Advanced Polymer XHD Impact Recovery Bollards

MATERIAL PROPERTIES ADVANCED POLYMER 4
ADVANCED POLYMER UV RESISTANT 4
What is UV Stabilisation? 5
VP319 5
ADVANCED POLYMER IMPACT RESISTANT 5
IMPACT RESISTANT 7
INSTALLATION 8
INSTALLATION OPTIONS 9
INSTALLATION OPTIONS 11
CONCRETE FILLING BOLLARDS 13
SAFETY THROUGH CONTROLLED DEFLECTION 15
MOST RESILIENT OPTION 16
LOW PROFILE RETAIL BOLLARD 18
REPLACEMENT RESISTANCE CORE 19
SPECIFICATION DRAWINGS 20
LOW PROFILE RETAIL BOLLARD 21
INGROUND "RIGID" CONCRETE FILLED 22
INGROUND "FLEXIBLE" 23
IMPACT RECOVERY INGROUND 24
IMPACT RECOVERY SURFACE MOUNT 25
PTA BOLLARD SPECS 26
IMPACT RECOVERY BOLLARD SPECS 27
ZERO WASTE IN-GROUND FOUNDATIONS SPECS 28
650 DEPTH ZERO WASTE FOUNDATIONS 29
SURFACE MOUNT IMPACT RECOVERY SYSTEM 30
REPLACEMENT RESISTANCE CORE 31
ADVANCED POLYMER BOLLARD COVER 32
BOLLARD COVER DIMENSIONS 33
COLOUR CHART 34
WEIGHTS AND DIMENSIONS 35

ADVANCED POLYMER BOLLARDS OFFER:

- Non conductivity
- high impact resistance
- excellent toughness
- flexibility under load
- reliable performance across a wide range of temperatures
- UV Stabilisation
- reduced risk of brittle failure over time

Under lighter impact, the bollard can flex and recover. Scuff marks from tyres can typically be wiped clean using car cleaner and polish

Our Advanced Polymer is highly durable material designed to withstand impact and the harsh Australian sun and is an efficient electrical insulator, making it great for applications where safety is paramount.

We use a hexene copolymer based linear medium density polyethylene with a base resin VP319 polymer containing a long-term UV stabilisation package greater than UV8 providing excellent impact resistance, light weight, and high tensile strength. An in-house QA system is in place to provide reliability and continuity of supply.

Benefits

- Abrasion Resistant
- High impact resistance
- Abrasion resistant
- Scratch and marking resistant
- Chemical resistant
- Water and moisture resistant
- UV Resistant/ shatter resistant
- Long-wearing
- Corrosion resistant
- Strength tested to AS/NZS 4766:2006
- UV20 Protection to ASTM D2565
- **Australian Made**



4.5 times the UV8 protection required by the Australian standard (AS/NZ 4766:2006)

LIFESPAN 50 YEARS / 25 IN DIRECT SUNLIGHT

MATERIAL PROPERTIES ADVANCED POLYMER

Property	Typical value
Tensile strength at 22°C	1,400 psi
Tensile modulus	57,000 psi*
Elongation at break	100%
Flexural modulus	29,000 psi
Wall thickness	7 mm
Material	Hexene copolymer-based LMDPE
Electrical conductivity	Non-conductive
UV protection	UV-stabilised
Manufacture	Australian made

advanced polymer technologies

LONG-LIFE BOLLARDS
LIFESPAN 50 YEARS / 25 IN DIRECT SUNLIGHT



UV RESISTANT
4.5 times the UV8 protection required by the Australian standard (AS/NZ 4766:2006)



IMPACT RESISTANT
Advanced Polymer blend provides 100% elongation before reaching breaking point

Advanced Polymer Bollards and Bollard Covers are made of a plastic material- but modern plastics have come along way fin the past twenty years. Many have seen the effects on plastic objects that are exposed to

the harmful UV-rays of our Sun. Over time, they become brittle, chalk and crack as the polymer elongation drops, that is, the structural integrity of plastic such as PVC.

The natural conclusion is that poly Bollards won't last long in the Sun. This is just not true, especially not with our Advanced Polymer Bollards and Bollard Covers which are made from a blend of LDPE, Ultra-Violet Stabilization and VP319 Resin our Advanced Polymer Bollards and Bollard Covers have more than **4.5 times the UV8 protection required by the Australian standard (AS/NZ 4766:2006).**

WHAT IS UV STABILISATION?

Many metals will rust and corrode as they weather and wither away. Steel, however, can be strengthening against oxidisation when chromium is added or protected from rust and oxidisation using galvanising. There are different grades of stainless steel. Kitchen sinks, for example, are often made of a high-grade of stainless steel.

Similarly, UV stabilisers are to bollards like what the chromium is to steel. When added to the polymer mix, the plastic is protected against becoming brittle in the Sun. UV stabilizers in the polymer protect the Bollard against the harmful UV rays, preventing it from bulging, warping, or going brittle over time, inhibiting and absorbing the harmful UV light that causes it break down.

So, in the same way that some steels are called stainless, you could similarly label UV stabilised poly a type of "stainless poly". Of course, all material has a finite life. Stainless steel will still rust and corrode; it just takes much longer for this to happen.

VP319

Australia experiences some of the highest levels of UV radiation in the world. As such, leading edge technology is required to ensure our bollards remain reliable and durable for a long time. UV8 level of stabilisation has been considered the minimum required for good long-term protection in Australia. Our UV stabilisation package provides a much higher level of protection than the Australian industry standard (AS/NZ 4766:2006).

Through careful selection of a high-quality Polyethylene base polymer specifically designed for tank use, advanced additives such as UV stabilisers and antioxidants, pigmented "SUPA UV" provides a UV36 level of stabilisation.



4.5 times the UV8 protection required by the Australian standard (AS/NZ 4766:2006)

ADVANCED POLYMER IMPACT RESISTANT

Plastic materials are frequently used in construction, military and industrial applications that require impact resistance and toughness. As implied by the name, impact resistance is the ability of a material to resist both fracture and deformation when temporary force is applied.

High impact resistant plastics

Unlike steel Bollards (and most imported plastic Bollards on the market made from old fashioned plastics that over time fade and become brittle), our Bollards have unique properties and benefits that allow them to perform in demanding environments. Whilst the impact resistance of most plastics are temperature-dependent (becoming brittle below 15° , LDPE retains its properties in even low temperatures.

Heavy Duty Design

Traditionally, plastic bollards were designed to be temporary (with around 1-3 mm wall thickness) which was not impact resistant.

More recently solid bollards made from recycled materials were introduced , and whilst good for a pine log replacement, a solid bollard has nowhere to dissipate the impact energy so will dislodge the footing when impacted.

A hollow plastic bollard absorbs impact force, flexes and recovers without damage to the footings. Our Bollards and Bollard Covers are rotomoulded from a solid piece of Advanced Polymer material, with heavy duty 7 mm walls which ensures that they are structurally sound and robust enough to withstand impact after impact.

We also retain our good looks

Solid 7 mm walls ensure our Bollards and Bollard Covers remain looking good impact after impact. Made using a durable, versatile thermoplastic that offers fantastic impact resistance and tensile strength. Since its molecules are packed together so tightly, this material boasts incredible toughness and rigidity combined with the ability to absorb impact force.

Unlike steel that will rust, corrode, fade and distort when impacted (as shown below), our Poly Bollards will flex under extreme conditions and recover. If scratched, they are the same colour throughout and when scuffed by vehicle tyres, they can simply be wiped clean. We can even self-recover from light impact, or (when installed using the ZERO WASTE Impact Recovery System) become re-usable following even severe impact.

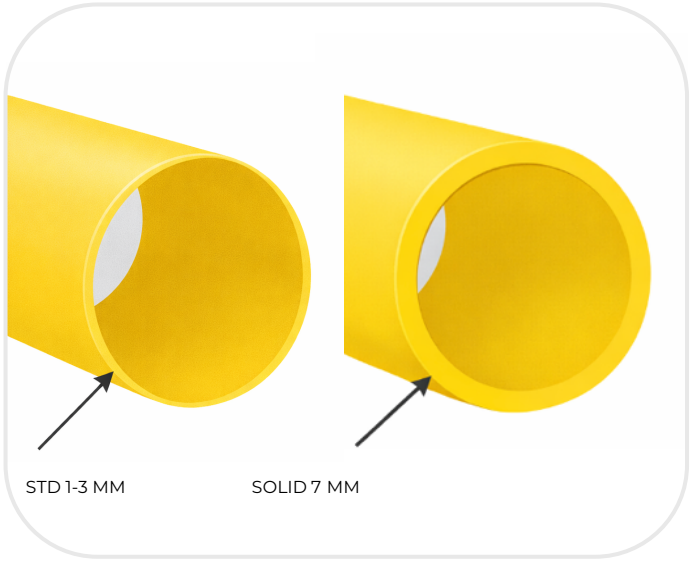

IMPACT RESISTANT

Unlike rigid materials, Advanced polymers absorb impact energy, allowing the bollard to “flex” and recover, reducing the force transferred into the footing and the subsequently reducing the risk of expensive footing damage.

Thin plastic and PVC are not suitable for bollards. PVC is brittle and dries out when filled with concrete making it extremely vulnerable to splitting and cracking.

Heavy walled plastic becomes rigid making it vulnerable to cracking and splitting and transferring the impact force to the footing making it more vulnerable to damage when bollard is impacted.

Advanced Polymer Bollards are made from a solid piece of Advanced Polymer material, with heavy duty 7 mm walls which is robust enough to withstand impact and malleable enough to maintain the ability to absorb impact **“flex” and recover.**

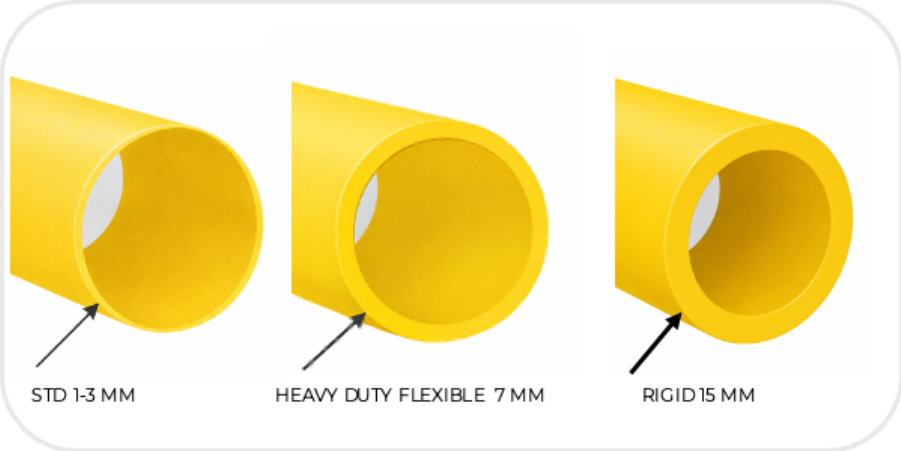

IMPACT RESISTANT
Advanced Polymer blend provides 100% elongation before reaching breaking point

INSTALLATION



RIGID

IMPACT RESISTANT

IMPACT RECOVERY

INSTALLATION OPTIONS

Use the comparison chart to decide which installation method is the most suitable for your project. Shown below Least durable to Most durable options.

Retail Indoors Surface Mount
In-ground – Fully Concrete Filled
In-ground – Hollow
In-ground – Concrete Filled to Ground Level
Impact Recovery – Surface Mount
Impact Recovery – In-ground 350
Impact Recovery – In-ground 650
XHD Impact Recovery – In-ground 650 (Extra Heavy Duty)



INSTALL	SPEED	Outcome following impact
In-ground – Fully Concrete Filled	**≈ 8 km/h**	Full concrete filling increases rigidity and substantially reduces the bollard's ability to flex. Greater impact loading is transferred into the footing and surrounding ground, increasing the risk of footing damage, cracking or dislodgement.
In-ground – Hollow	**≈ 10 km/h**	The hollow bollard can flex and recover from light impacts. Under more severe impact, permanent deformation may occur, and the bollard may not fully recover. Footing damage remains possible because there is no impact-recovery mechanism below ground.
In-ground – Concrete Filled to Ground Level	**≈ 11 km/h***	Concrete within the embedded section reinforces the bollard around the ground line while retaining flexibility above ground. The exposed hollow section can still deform under low-speed impact, although footing damage remains possible under more severe loading.
Impact Recovery – Surface Mount	**≈ 13 km/h**	The bollard deflects and self-recovers under low-speed impacts and side glances. Under higher loading, the resistance core may bend and require replacement. The existing concrete foundation normally remains serviceable.
Impact Recovery – In-ground 350	**≈ 16 km/h**	Improved stability over the surface-mount option. The bollard deflects and self-recovers under low-speed impacts and side glances. Under higher loading, the resistance core may bend and require replacement. The surrounding footing normally remains serviceable.
Impact Recovery – In-ground 650	**≈ 19 km/h**	Greater embedment improves resistance to more serious low-speed impacts. The bollard deflects and self-recovers under low-speed impacts and side glances. Under higher loading, the resistance core may bend and require replacement. The surrounding footing normally remains serviceable.
XHD Impact Recovery – In-ground 650 (Extra Heavy Duty)	**≈ 21 km/h**	Highest-duty option for severe low-speed impacts, including contact from utility vehicles or trucks. Under higher loading, the XHD resistance core may bend and require replacement while the bollard and surrounding footing normally remain serviceable.

BOLLARD		INSTALLATION	BOLLARD REUSABLE	FOOTINGS REUSABLE
	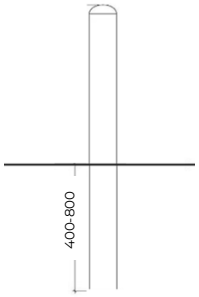	**INGROUND CONCRETE FILLED** **LOWEST RESISTANCE** Advanced Polymer 150 Ø 1800 L. Installed directly inground (suggest min 600 mm Depth in solid concrete 30MPa) and concrete filled. High force transfer to bollard and footing under impact. May survive light impact (with possible damage to concrete at base and inside bollard) but with multiple impacts (or impact at medium speed) both the bollard and footings will need replacing		
	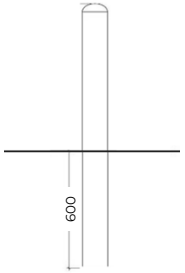	**INGROUND HOLLOW** **IMPACT TOLERANT** Advanced Polymer 150 Ø 1800 L. Installed directly inground and left hollow, or concrete filled (to ground level providing reinforcement where needed). Flexible material- Bollard will withstand light impacts (such as carpark bumps and recover without need for maintenance. Upon medium to high impact, the bollard may bend but remain secured in concrete footing (providing a safety cushion between the vehicle and the electrical asset). Bollard and footings may need replacing.		
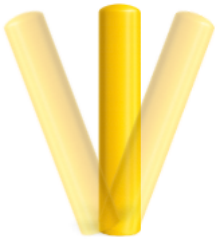	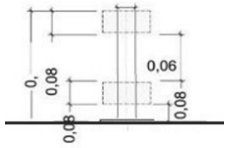	**SURFACE MOUNT IMPACT RECOVERY** **LOW-MEDIUM RESISTANCE** Advanced Polymer 150 Ø 1200L. Suitable for low speed zones such as carparks. Existing footing must be solid concrete or asphalt. Rather than “flexing” the bollard has a shock absorbing core that allows the bollard to deflect up to 20 degrees and slowly recover from low speed impacts and glances (no maintenance). Footings and bollard are also reusable following even severe impact.		

BOLLARD		INSTALLATION	BOLLARD REUSABLE	FOOTINGS REUSABLE
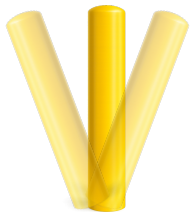	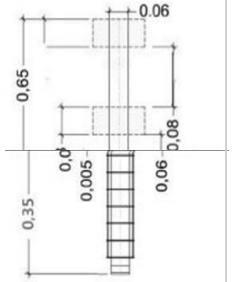	**INGROUND 350 MM IMPACT RECOVERY MEDIUM RESISTANCE** Advanced Polymer 150 Ø 1200L (350 mm depth) Suitable for low speed zones such as carparks. 350 mm footing suitable for areas with existing concrete footings to provide stability to concrete base and protect against dislodgement. Rather than "flexing" the bollard has a shock absorbing core that allows bollard to deflect up to 20 degrees and slowly recover from low to medium speed impacts and glances (no maintenance). Footings and bollard are reusable following even severe impact.	♻	♻
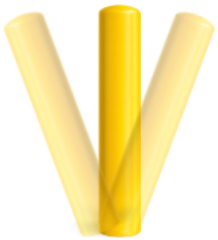	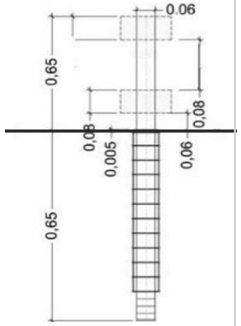	**INGROUND 650 MM IMPACT RECOVERY HIGH RESISTANCE** Advanced Polymer 150 Ø 1200L (650 mm depth) Suitable for low to medium speed zones such as carparks. 650 mm footing suitable for areas with no existing concrete footings (free standing footing). Rather than "flexing" the bollard has a shock absorbing core that allows bollard to deflect up to 20 degrees and slowly recover from low to medium speed impacts and glances (no maintenance). Footings, and bollard are reusable following more severe impacts and glances (such as utility vehicles)	♻	♻
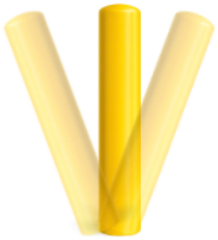	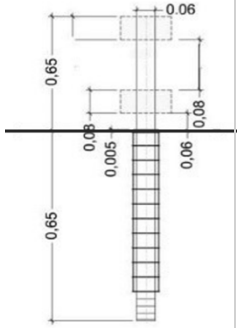	**INGROUND 650 MM XHD IMPACT RECOVERY MOST RESISTANT** Advanced Polymer 150 Ø 1200L (650 mm depth Extra Heavy Duty Resistance Core provides 150% greater resistance to bending upon impact from a vehicle) Suitable for medium to high impact from large passenger vehicles and utility vehicles. Rather than "flexing" the bollard has a shock absorbing core that allows bollard to deflect up to 20 degrees and slowly recover from low to medium speed impacts and glances (no maintenance). Footings and bollard are reusable following severe impacts (such as utility vehicles).	♻	♻

CONCRETE FILLING BOLLARDS

Concrete filling a bollard does not reduce risk of failure.

Concrete filling a bollard turns it into a rigid bollard—shifting the likely failure point from the bollard to the footing. For low speed environments (such as carparks) concrete filling a bollard can actually increase the damage and yet offer little in the way of increased protection.

With a rigid bollard the impact force is transferred to the footing which is the most important aspect and the most likely component to fail. Concrete filling a bollard does not increase the capacity of the footing; it increases bollard rigidity and transfers greater impact loading to the footing (increasing the likelihood of failure or dislodgement).

A 5-tonne forklift at 2–3 km/h can impose similar impact energy to a passenger vehicle at 5 km/h. The load generated depends heavily on the distance over which the vehicle and bollard deform.

In this illustrative comparison, increasing combined deformation from 50 mm to 300 mm reduces the estimated average force transferred through the system by approximately 83%

Deformation	Est force	Moment
300 mm — flexible response	4.8 kN	2.9 kN·m
100 mm — limited movement	14.5 kN	8.7 kN·m
50 mm — rigid response	29 kN	17.4 kN·m

Assumptions Based on 1500 kg Vehicle a 5km/hr & 600 mm impact height

Configuration	Safety behaviour	Best suited to
Concrete-filled APB	Rigid response with greater load transferred into the vehicle, the footing and the surrounding pavement	Applications where a rigid post is specifically required









Advanced Polymer bollards remove the risk of bollards rusting or becoming brittle (removing the risk of bollards breaking off at ground level as shown left) and damage upon light impact



BUT Once fully filled with concrete, the installation behaves more like a traditional rigid bollard, and the impact force is directed to the footing- The greater the force the greater the damage.

When a bollard is impacted- the impact force must go somewhere!

SAFETY THROUGH CONTROLLED DEFLECTION

Protection does not require zero movement. It requires controlled movement that maintains a safe separation from the asset

Advanced Polymer Bollards are designed to deform under low-speed impact, creating a more forgiving contact surface and reducing concentrated loading on the expensive foundations

You can install concrete to ground level to add stability to the footing, but when concrete filled bollards lose the ability to “flex

Where increased impact management is required, the bollard can be combined with the Impact Recovery System. The system allows controlled deflection and recovery while protecting the surrounding footing and reducing the need for excavation and replacement.

VIEW VIDEO



Configuration	Safety behaviour	Best suited to
Hollow APB	Controlled flex under low-speed impact, reducing concentrated load at the footing	Typical carparks and incidental vehicle contact
Concrete-filled APB	Rigid response with greater load transferred into the vehicle, the footing and the surrounding pavement	Applications where a rigid post is specifically required

.

For 1250 H Bollard this equates to approx.
100 mm controlled deflection



MOST RESILIENT OPTION

Installing Advanced Polymer Bollards using the Impact Recovery System is the most resilient option of all options

The Impact Recovery System gives you:

- deflection
- resistance
- recovery
- maintained stand-off distance
- reduced footing damage

Where asset clearance must be maintained, the Impact Recovery System provides controlled deflection and resistance—rather than relying on footing failure to stop movement.

Using a shock-absorbing mechanism, the bollard is able to deflect under impact, self-recover from low-speed contact, and reduce force transfer into the surrounding footing.

This helps protect the foundation from damage and enables reusability of both the bollard and expensive concrete footings after impact.

In severe impact events, the resistance core may bend and require replacement, while both the **bollard and footing remain reusable**. The result is lower maintenance, faster replacement, and longer-lasting bollards

VIEW VIDEO

Configuration	Safety behaviour	Best suited to
APB + IRS	Controlled deflection with resistance and recovery, helping maintain separation from the protected asset	Electrical infrastructure and higher-risk carparks

For 1250 H Bollard this equates to approx. 430 mm controlled deflection



IMPROVE SAFETY & RESILIENCE USING IMPACT RECOVERY SYSTEM

You can install bollards directly in concrete, but we highly recommend using the Impact Recovery System to improve safety and resilience.

NB: Because the Impact Recovery System absorbs the impact force, the depth of foundations can be substantially reduced.

For this reason:

- **Surface Mount** — suitable for standard carpark applications where a sound existing concrete footing is available
- **350 mm In-ground** — suitable for standard low-impact locations such as carparks
- **650 mm In-ground** — suitable for medium- to high-impact applications
- **XHD 650 mm In-ground** — suitable for high-impact locations and heavier vehicles

Upon low impact the bollard deflects up to 25 degrees and self recovers. In the event of high impact, the resistance core is designed to resist forward movement and is unlikely to bend beyond approximately 30° without substantial vehicle damage. The vehicle may become immobilised or hung up on the core, making forward or reverse movement difficult without recovery assistance.

For 1250 H Bollard this equates to approx. 430 mm controlled deflection



LOW PROFILE RETAIL BOLLARD

Advanced Polymer Bollards secured using Surface Mount Base Plate

Available in almost any colour to match Corporate Profile.

The low-profile Retail Indoor Bollard allows controlled deflection under impact from trolleys and safe slow recovery. When impacted by trolley the bollard “flexes” a maximum of around 90 mm and recovers without damage.

The outer casing is dent and scratch resistant (they don’t show as bollard is same colour throughout the thick 7 mm walls), corrosion-free construction makes it suitable for protecting assets in supermarkets, shopping centres and other indoor environments exposed to impacts from trolleys, stock cages and cleaning equipment.

They will continue working for decades without the need for continual costly repairs. Scuff marks can simply be wiped clean using standard cleaning materials and a soft cloth and can be brought to high shine using car polish.

For 600 H Bollard this equates to approx.
90 mm controlled deflection



REPLACEMENT RESISTANCE CORE

Only replaceable component



SURFACE MOUNT



350 MM INGROUND



650 MM INGROUND



XHD 650 MM INGROUND

SPECIFICATION DRAWINGS

SMART RETAIL BOLLARD

Advanced Polymer Bollards secured using the re-usable Surface Mount Base Plate

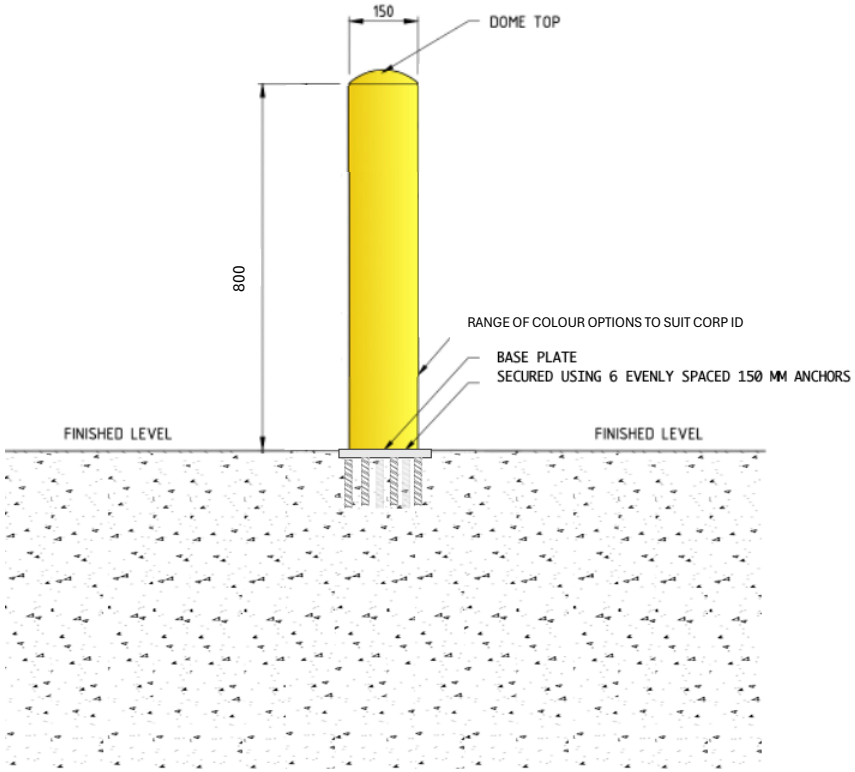

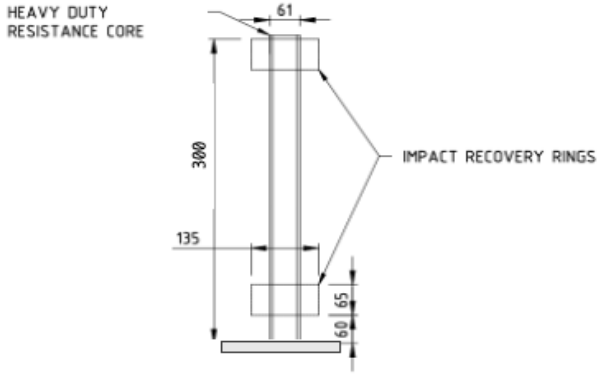

The Retail Bollard allows controlled deflection under impact and safe slow recovery.

The outer casing is dent-resistant, corrosion-free construction makes it suitable for protecting assets in supermarkets, shopping centres and other indoor environments exposed to impacts from trolleys, stock cages and cleaning equipment. They will continue working for decades without the need for continual costly repairs.

INGROUND “RIGID” CONCRETE FILLED

Where a rigid, non-conductive bollard is required, the Advanced Polymer bollard can be concrete-filled.

- provides an impact-resistant outer casing
- prevents corrosion at ground level
- will not shatter like PVC
- is non-conductive

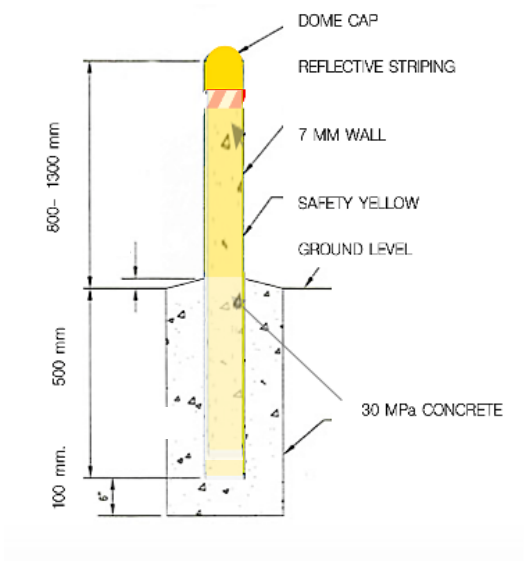

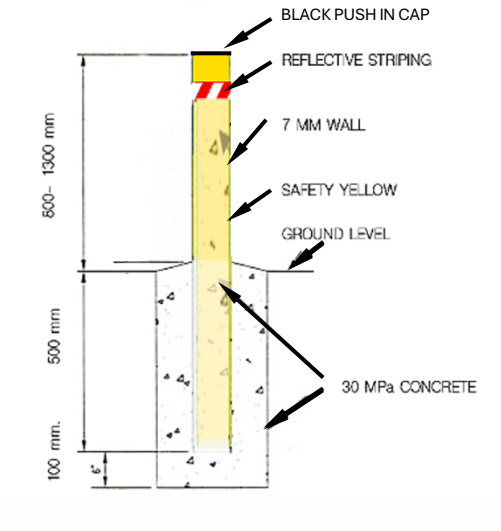

Combining the rigidity of concrete with the impact resistance, corrosion resistance and non-conductive properties of heavy-wall Advanced Polymer Bollards



THREE METHODS OF CONCRETE FILLING BOLLARDS

1. **Cut off cap and fill with concrete-** paint concrete once dry to match bollard

2. **Fill from the Base.** Remove the base, concrete-fill the bollard, reinstate and seal the base with tape, then turn the bollard upright for installation. (This can be completed in advance; however, each filled bollard will weigh approximately 65 kg)

3. **Fill from the Top.** Purchase push-in caps, allowing the bollard to be concrete-filled from the top. Remove cap (very easy to cut using saw) Once filled, insert the push-in cap

INGROUND “FLEXIBLE”

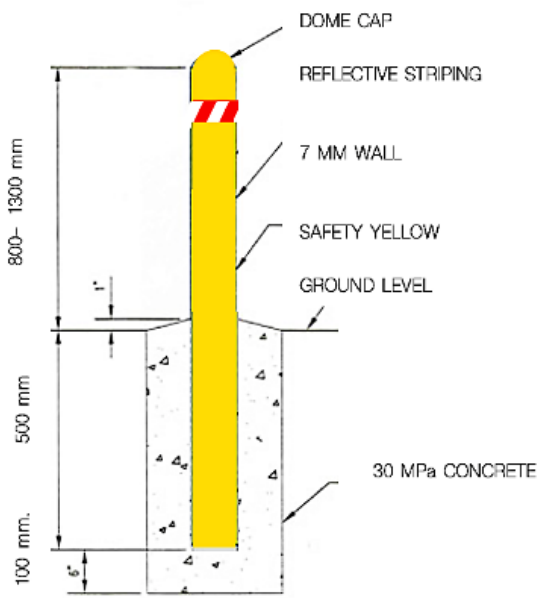

HOLLOW

Flexes upon light impact (such as carpark impact) and recovers.

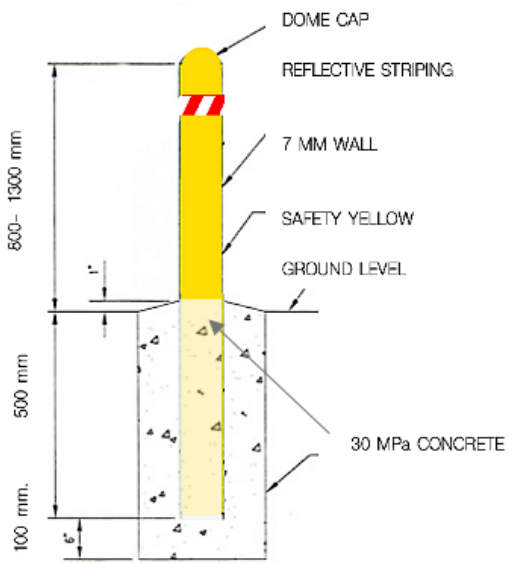

CONCRETE TO GROUND LEVEL

Can be concrete filled to ground level to reinforce bollard in weakest spot (do not concrete fill)

Base is removed. The bollard is filled with concrete and should be taped into position before installing bollard (to prevent concrete from falling out during installation).

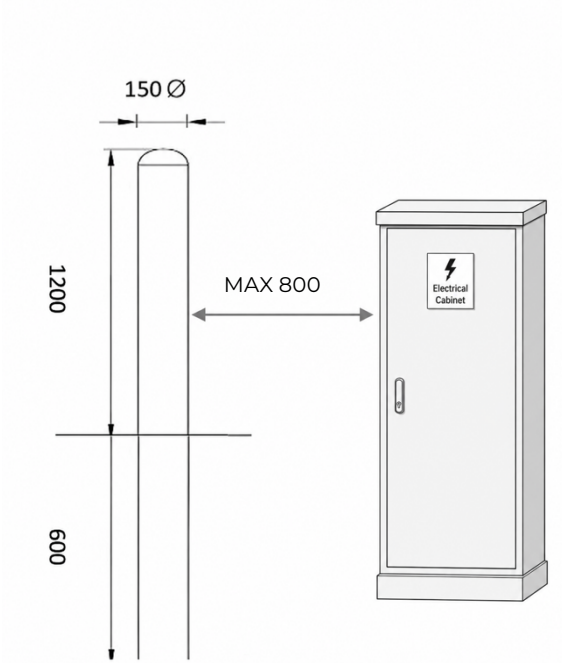

PLACEMENT

Place within 800 mm from electrical item to ensure bollard provides a non-conductive shield between the vehicle and the electrical item when badly impacted.

IMPACT RECOVERY

INGROUND

Advanced Polymer Bollards secured using a Heavy Duty/ or Extra Heavy Duty Resistance core on 650 mm Depth ZERO WASTE Foundations.

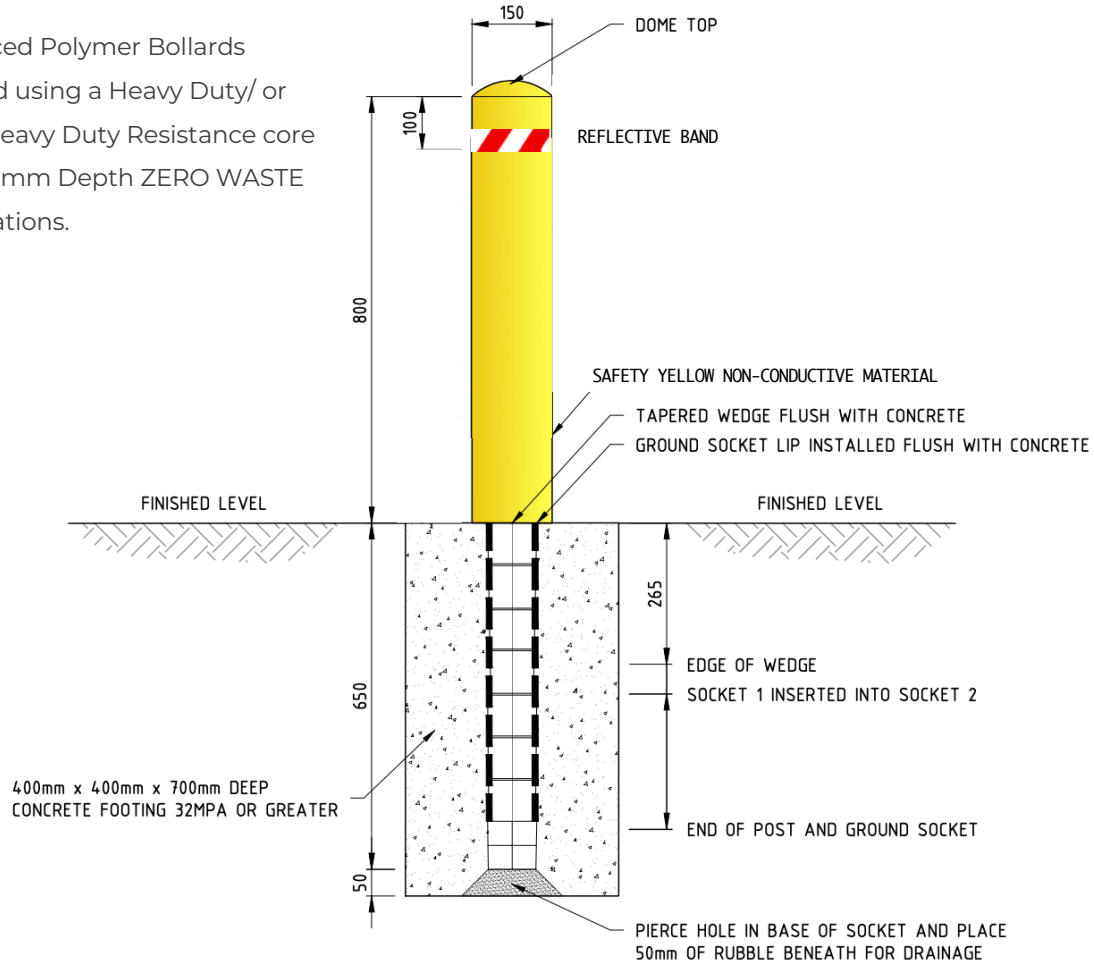

BOLLARD DETAIL

SCALE 1:10

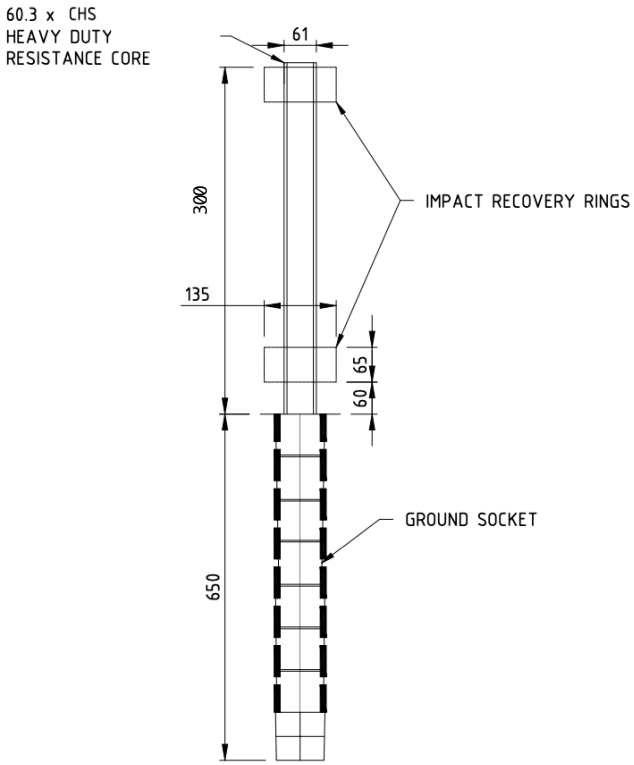

BOLLARD INTERNAL COMPONENT DETAIL

SCALE 1:10

IMPACT RECOVERY

SURFACE MOUNT

Advanced Polymer Bollards secured using the re-usable Surface Mount Base Plate

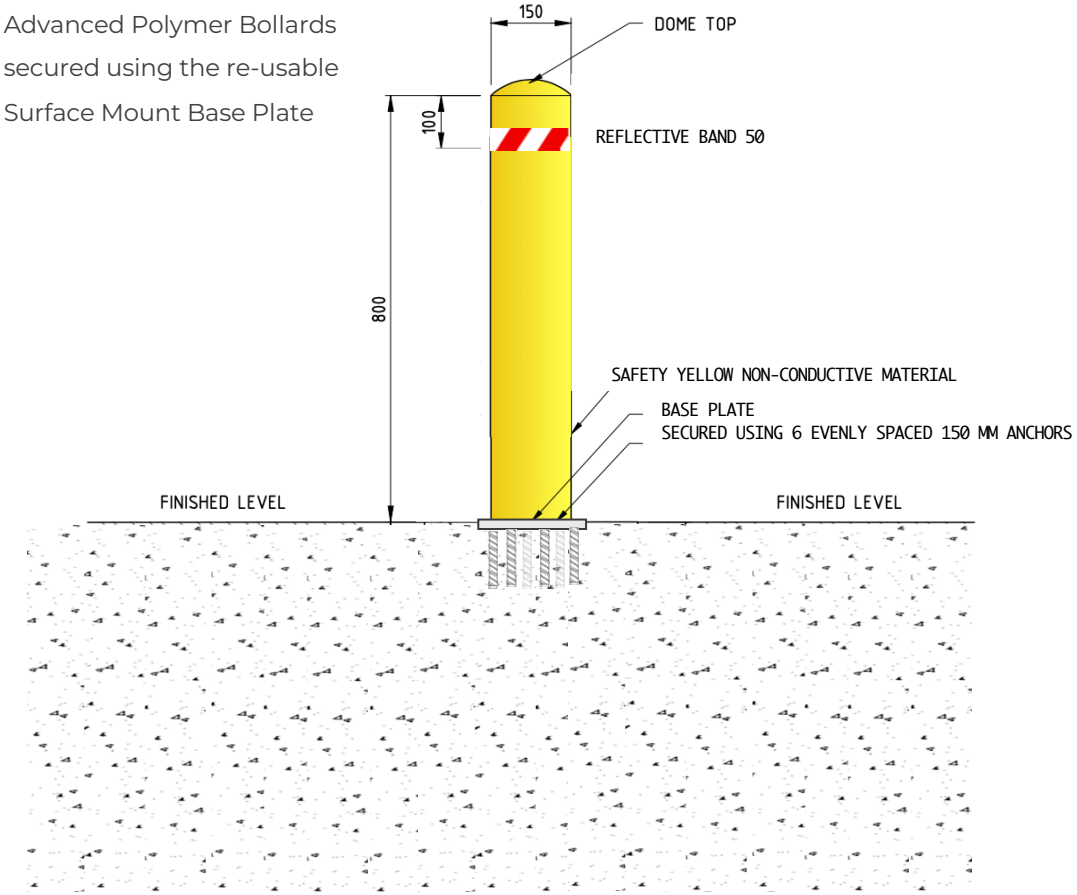

BOLLARD DETAIL

SCALE 1:10

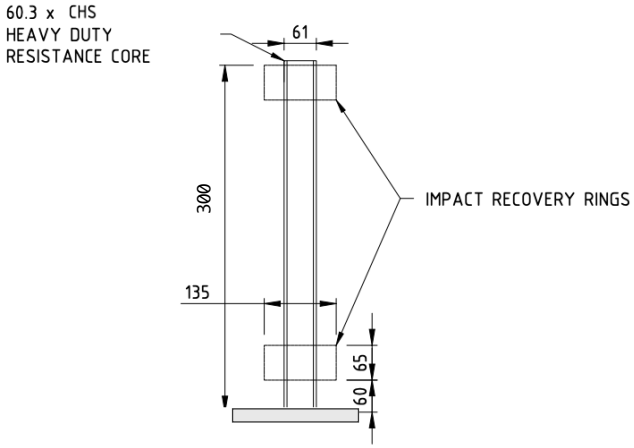

BOLLARD INTERNAL COMPONENT DETAIL

SCALE 1:10

PTA BOLLARD SPECS

Advanced Polymer Bollards secured using an Extra Heavy Duty Resistance core on 650 mm Depth ZERO WASTE Foundations.

GAS	LOCAL GOVERNMENT REQUIREMENTS; FOR EXAM (GAS DISTRUBUTION NETWOR
SEWER + WATER	AS/NZS 3500.1

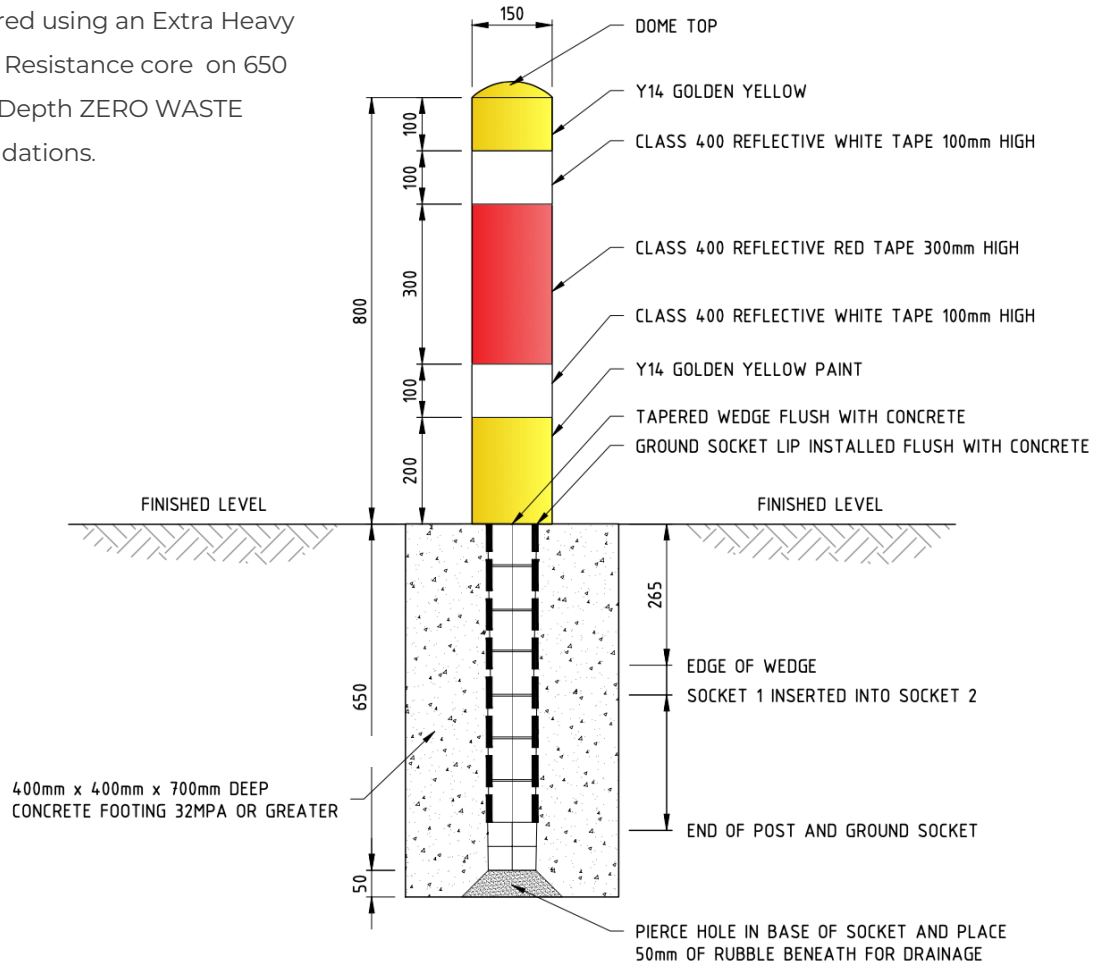

BOLLARD DETAIL

SCALE 1:10

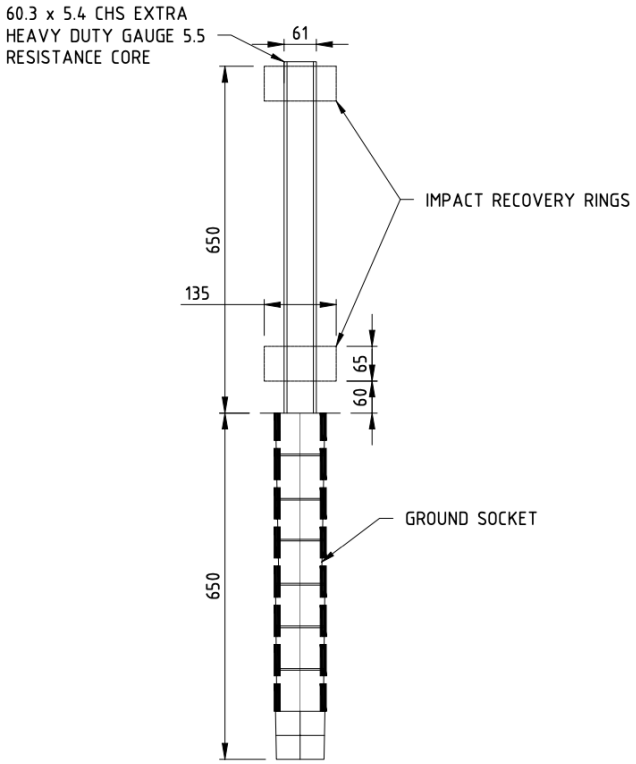

BOLLARD INTERNAL COMPONENT DETAIL

SCALE 1:10

IMPACT RECOVERY BOLLARD SPECS

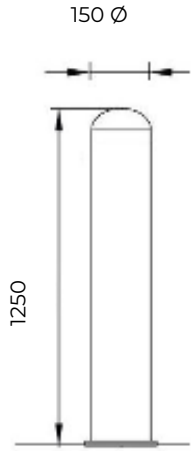

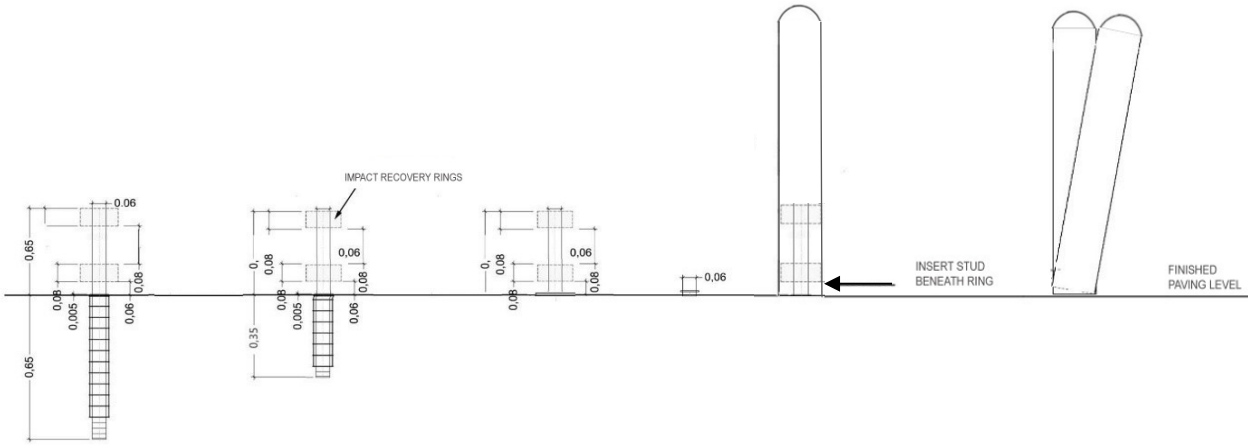

650 MM | 350 MM | SURFACE MOUNT | CAP | BOLLARD | IRS BOLLARD DEFLECTING

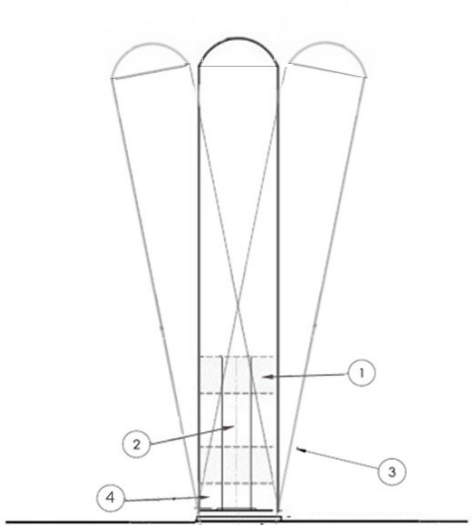

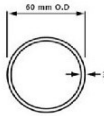

Resistance Core strength can be altered from heavy Duty to Extra Heavy Duty (650 mm depth footings only)

COMPONENTS

1. IMPACT RECOVERY RINGS
2. INTERNAL CORE 300 MM HIGH 3.6 WALL THICKESS
3. BOLLARD CASING - POLY/ STEEL OR STAINLESS
4. SECURING STUD (SECURITY STUD AVAILABLE)

Securing stud is inserted in hole at base of bollard and sits below the bottom Impact Recovery Ring

Best option to be determined based upon existing foundations and expected severity of potential impact

- Surface Mount
- 350 mm Footing
- 650 mm Footing
- XHD 650 mm footing

ZERO WASTE IN-GROUND FOUNDATIONS SPECS

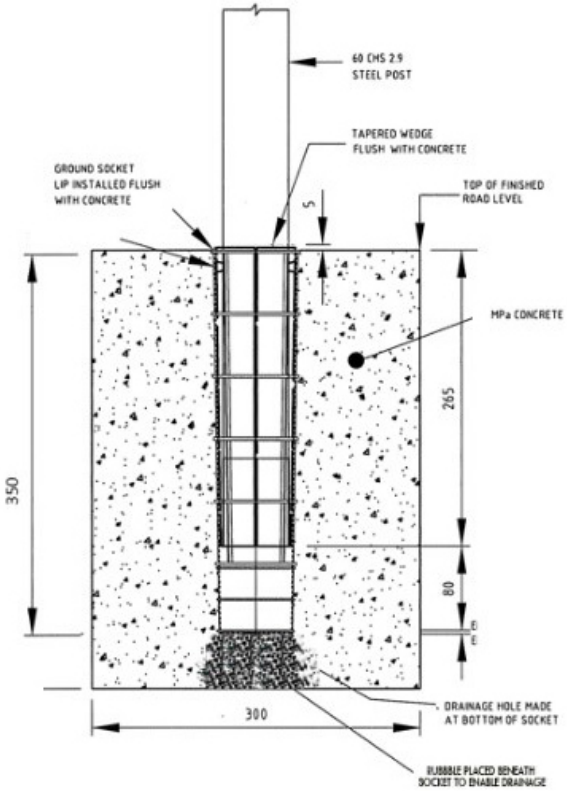

350 MM DEPTH

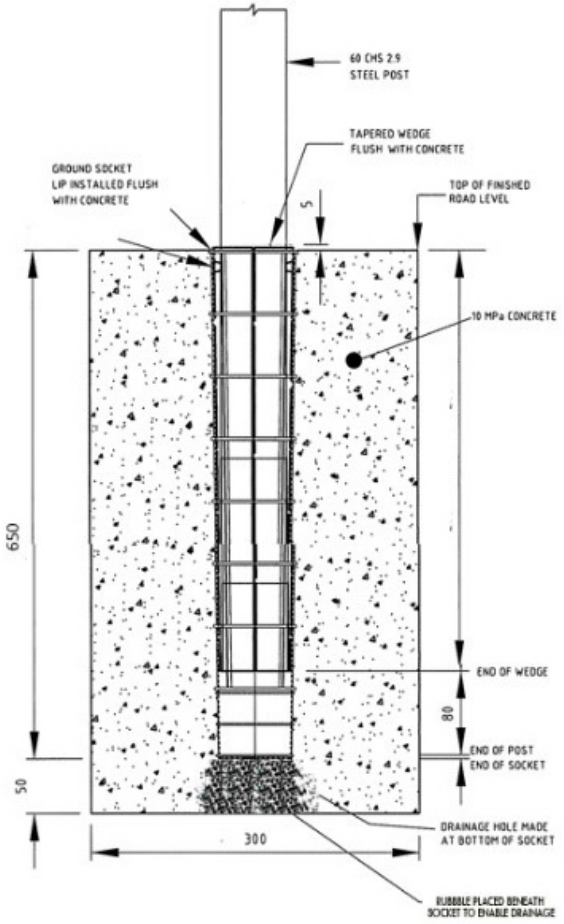

650 MM DEPTH

650 DEPTH ZERO WASTE FOUNDATIONS

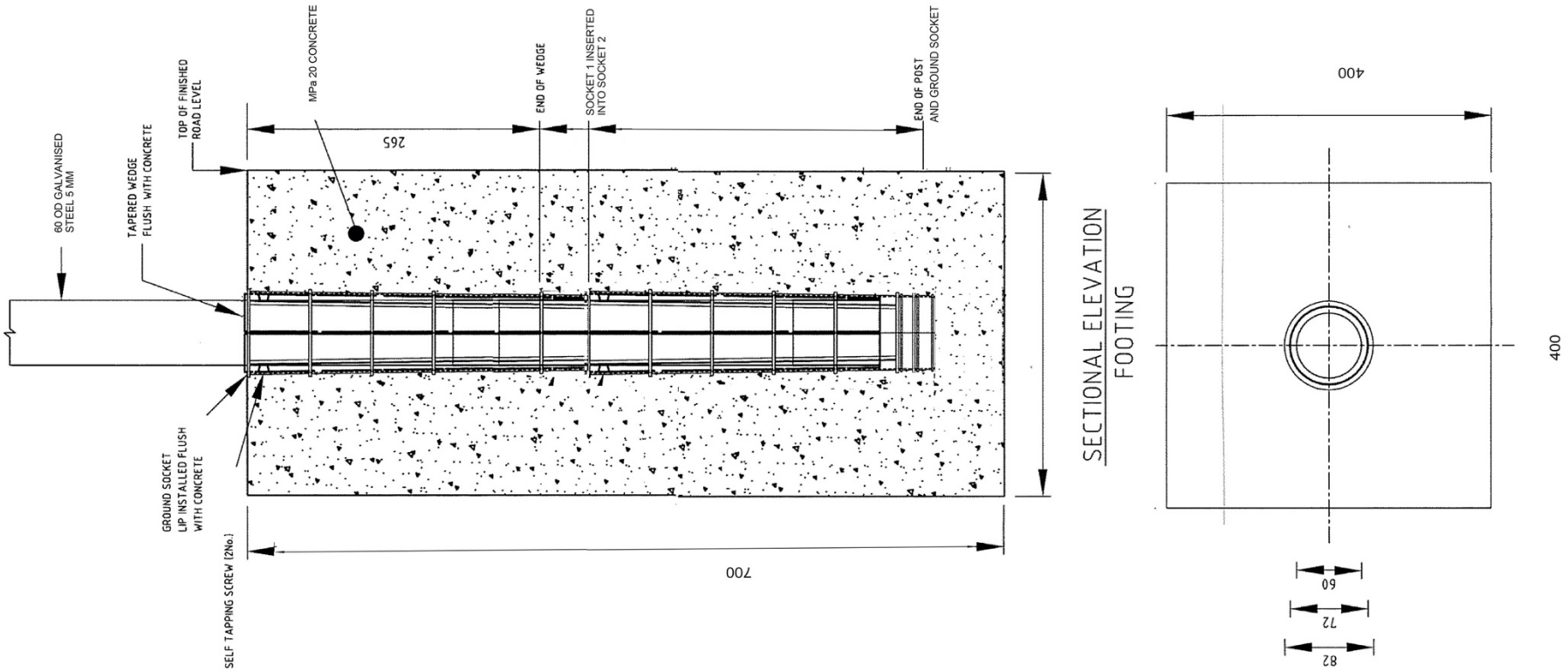

SURFACE MOUNT IMPACT RECOVERY SYSTEM

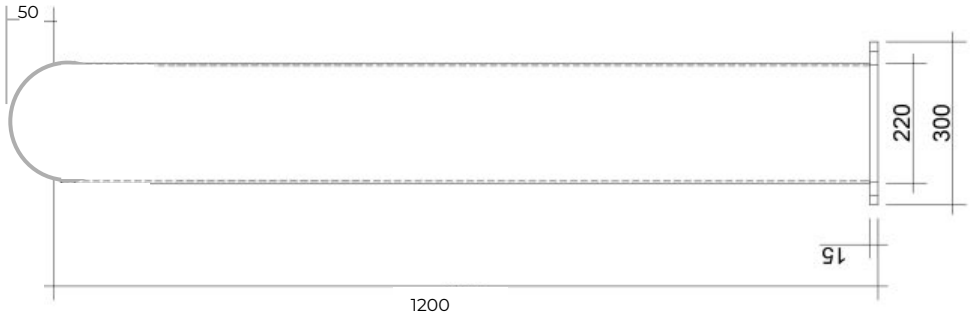

Surface Mount APB 150mm Ø

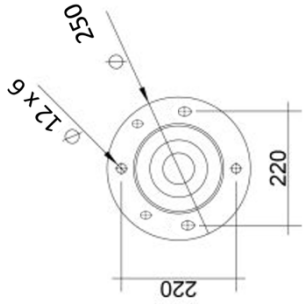

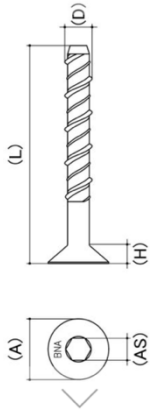

6 x Countersunk Screw Anchors

A: 27.65mm
L: 150 mm
D: M12: 12 mm
H: 10.20 - 10.40mm
AS: 10 mm

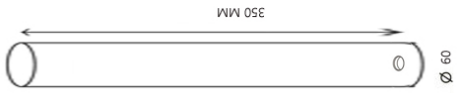

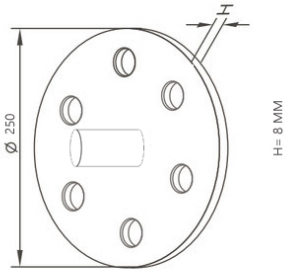

REPLACEMENT RESISTANCE CORE

Only replaceable component



SURFACE MOUNT



350 MM INGROUND



650 MM INGROUND



XHD 650 MM INGROUND

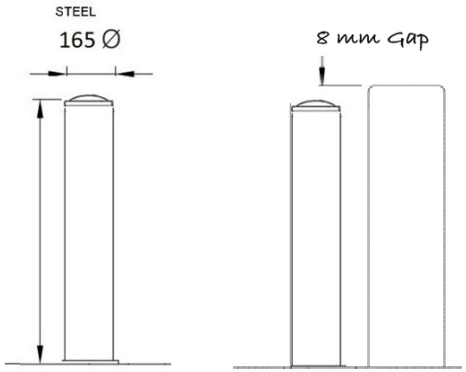

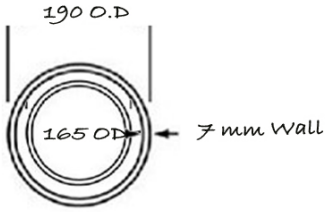

OPTION1

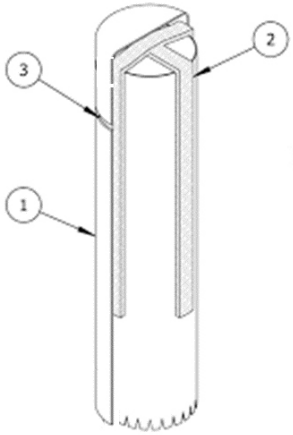

1.Cover
2. Padded tape
3. Padded tape

OPTION 2

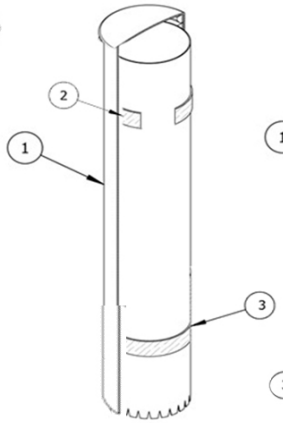

1.Cover
2. Padded tape
3. Padded tape

OPTION 3

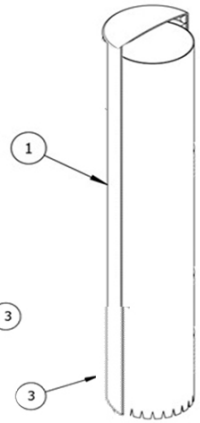

1.Cover
2. Screw

OPTION4

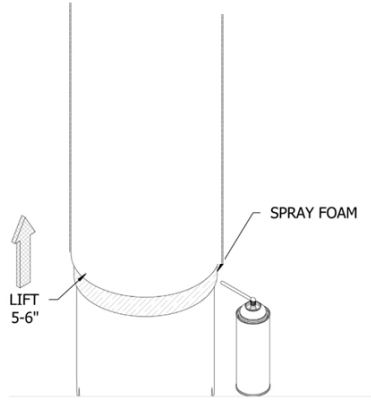

NOTES:
150 mm - Cover Bollards>136 mm Diameter
190 mm - Cover Bollards > 168 mm Bolalrds
Wall thickness 7 mm
Secured suing Padded tape/ Expaning foam or simple screw

ADVANCED POLYMER BOLLARD COVER

BOLLARD COVER DIMENSIONS

Available in a large range of colours- ask for colour chart

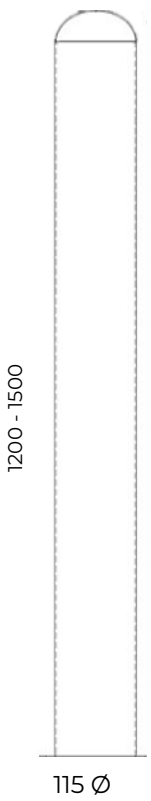

115 Ø

Fits 100 mm ∅ or less

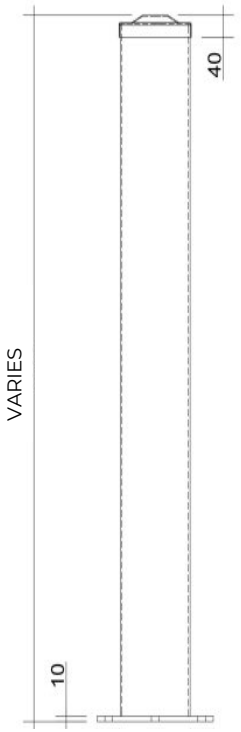

100 Ø

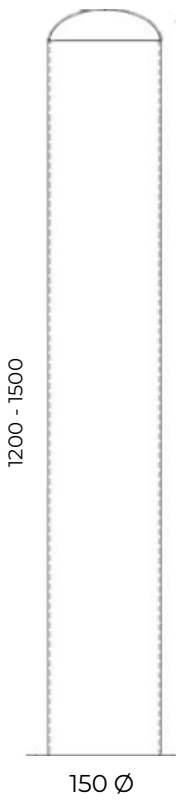

150 Ø

Fits 130 mm ∅ or less

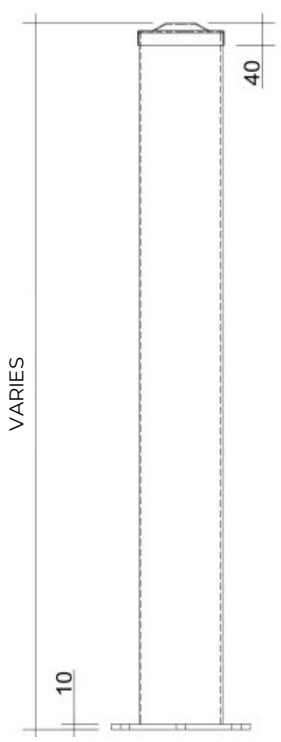

130 Ø

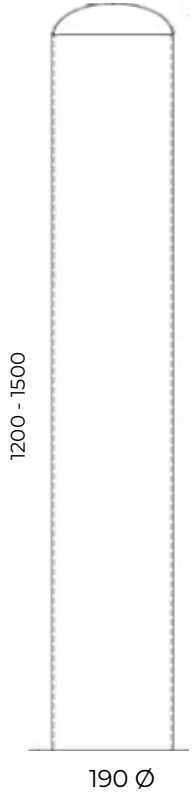

190 Ø

Fits Galv Steel Bollard 165 mm ∅

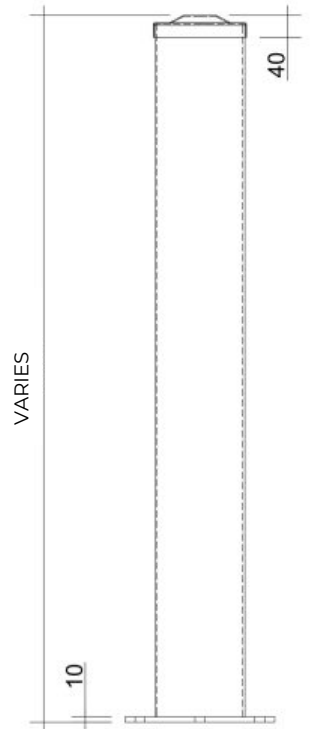

165 Ø

COLOUR CHART

05 WHITE

551 BLOOD RED

61 ORANGE

526 MAGENTA

539 PURPLE

18 YELLOW

257 LIME GREEN

209 LIGHT GREEN

329 TEAL

326 DARK BLUE

35 LIGHT BLUE

234 RIVER GUM

70 BLACK

89 SLATE GREY

206 MIST GREEN

2081 HERITAGE GREEN

890 ARMOUR GREY

930 WHEAT

392 MOUNTAIN BLUE

918 MERINO

916 BEIGE

947 SMOOTH CREAM

45 HERITAGE RED



WEIGHTS AND DIMENSIONS

CODE	DETAILS	WEIGHT
APB-1200	Advanced Polymer Bollard 1200 L	3kg
APB-1500	Advanced Polymer Bollard 1500 L	4 kg
APB-1800	Advanced Polymer Bollard 1800 L	6 kg
IRR-150	Ring to fit 150 Poly Bollard	1 kg
SMBP	Surface Mount Base Plate	8 kg
IRR-165	Ring to fit 165 mm Galvanised Steel Bollard	1.25 kg
IRR-168	Ring to fit 168 mm Stainless steel Bollard	1.3 kg
ICORE-SM	3.6 CHS Post x 300 mm	1 kg
ICORE-350	3.6 CHS Post x 650 mm	2 kg
ICORE-650	3.6 CHS Post x 950 mm	3 kg